DM-8163HS / Engine Dynamometer

Example Model Shown
(Image may not depict all standard included components)

DM-8163HS Eddy Current Dynamometer

Specifications

Power:	1,500 hp (1,119 kW)
Max Torque at Base Speed:	3,751 lb-ft (5,086 Nm)
Base Speed:	2,100 rpm
Max. Speed:	6,000 rpm
Construction Type:	Wet Gap
Rotor Inertia:	183 lb-ft^2 (7.71 kg-m^2)
Coolant Required at Max. Power:	150 gpm (567.8 lpm)
Coolant Inlet (Min-Max):	55-100 psi (379-689 kPa)
Coolant Inlet Temperature Max:	90°F (32.2°C)
Shipping Weight (estimate):	7,000 lb (3,175 kg)
Companion Flange / Hub Pattern:	1810 - US Customary
Coil Voltage / Hot Amperage:	90V / 11.81 amps

Recommended Accessories

- Driveshaft - 1810
- Torsional Coupling - 1810
- Flywheel Adapter Plate Kit
- Driveshaft Guard
- Sub-Base Kit
- Engine Cart
- Air or Electric Starter
- Engine Cooling Column
- Charge Air Cooler
- Water Recirculating System

Optional Accessories

Optional Manual
Shaft Lock

Optional Closed Loop
Cooling Center

Optional Charge
Air Cooler

Optional Driveshaft Guard

Optional Engine Cart

Various Facility Support Systems and Services Available

Bulk Fuel Storage
and Distribution

Coolant Storage
and Distribution

Water
Recirculation

Design, Project
& Construction
Management Services

Commissioning,
Start-up & Training

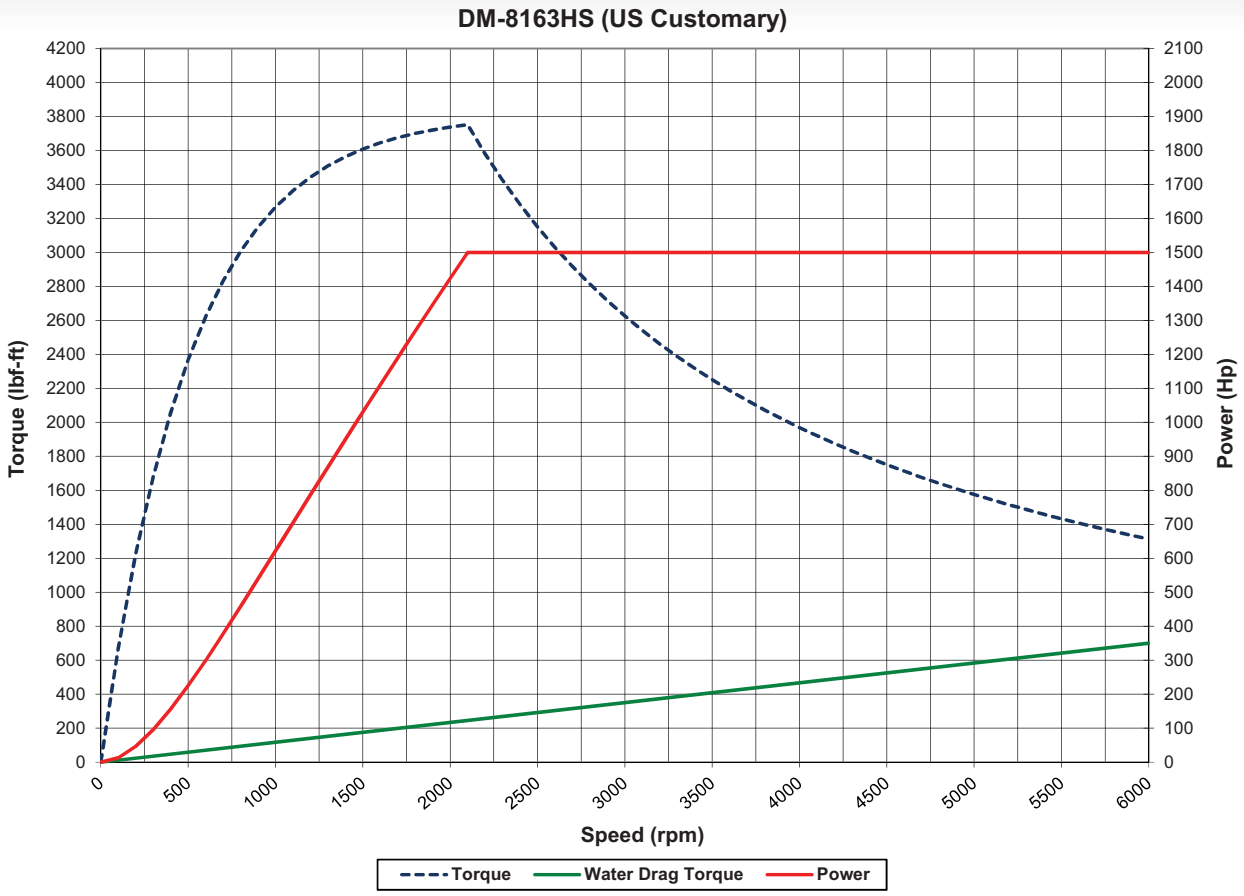
DM-8163HS (US Customary)
Torque (lbf-ft)
Power (Hp)
Speed (rpm)
Torque
Water Drag Torque
Power

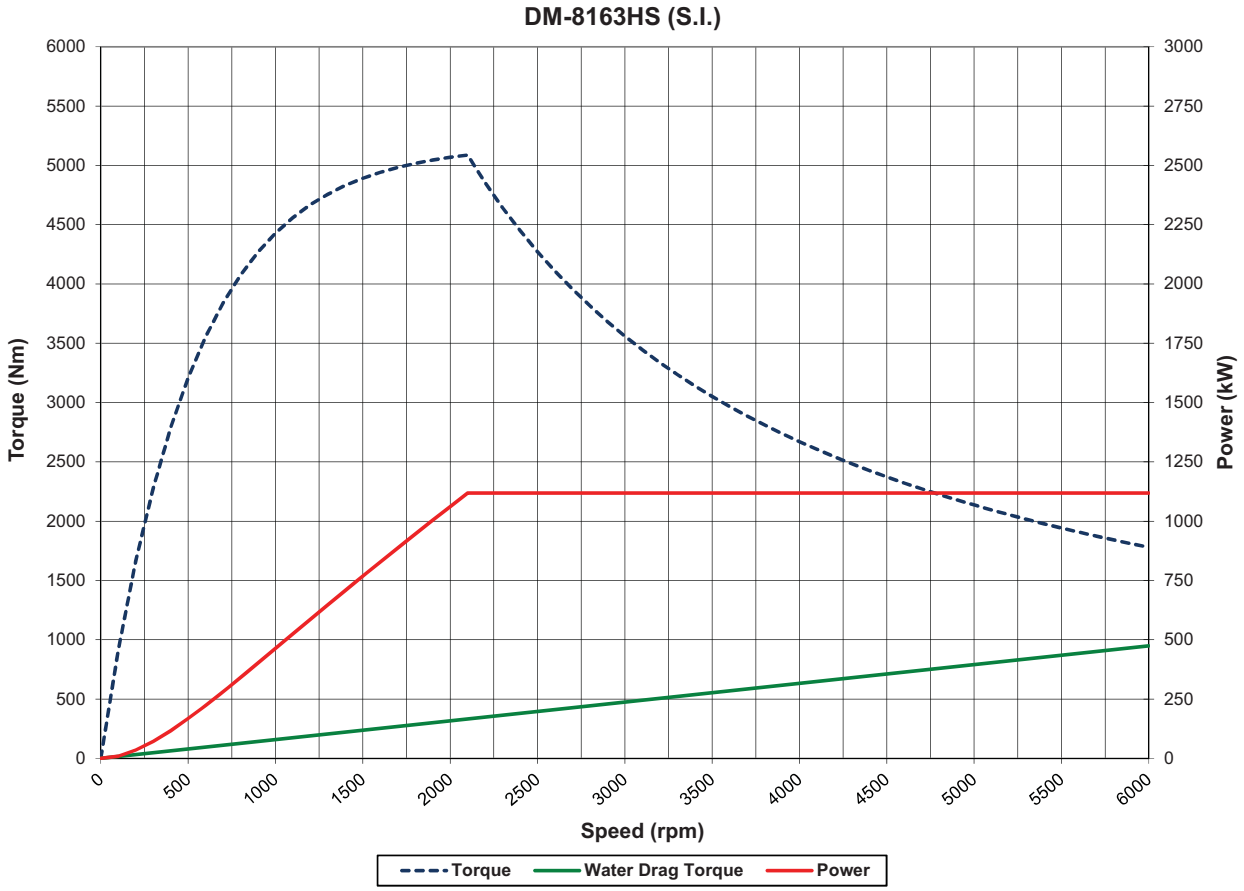
DM-8163HS (S.I.)
Torque (Nm)
Power (kW)
Speed (rpm)
Torque
Water Drag Torque
Power

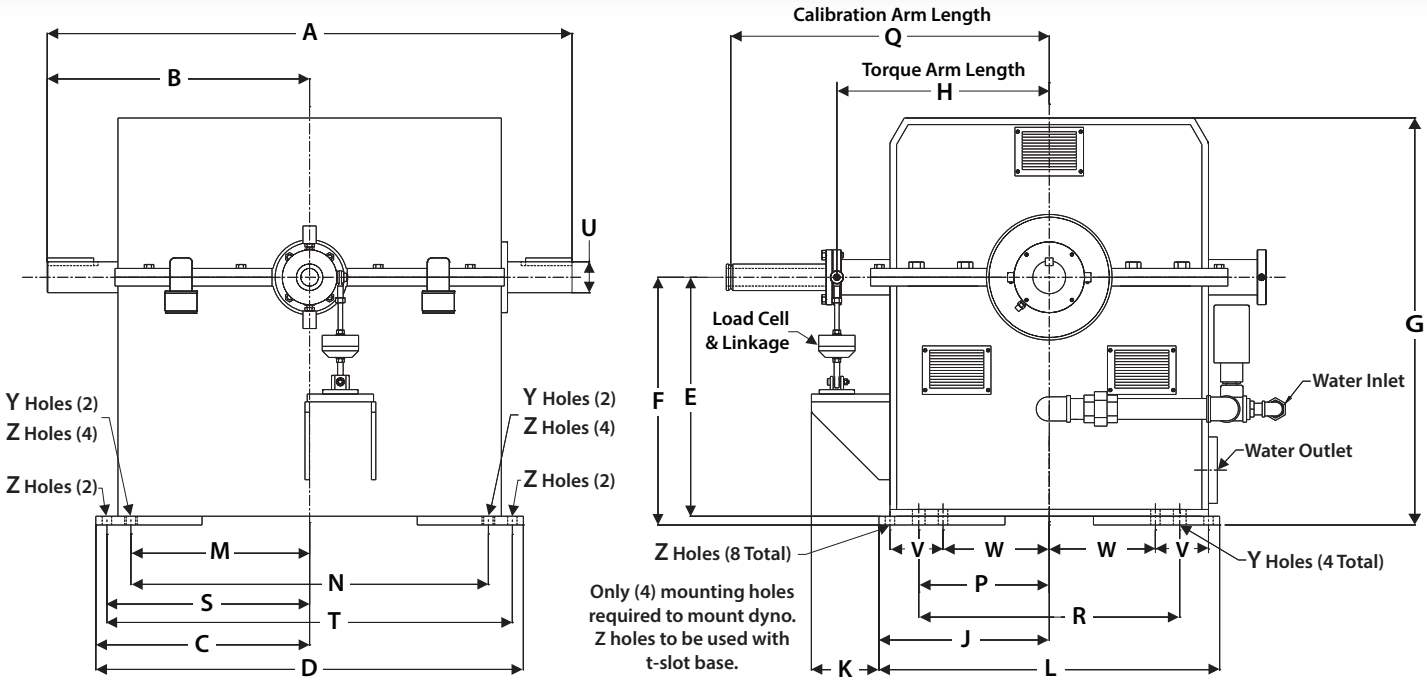

Note: Shown without companion flange

Units	A	B	C	D	E	F	G	H	J	K	L	M
US Customary	59.3	29.66	22.2	48.3	26.25	28	46	24	19.25	7.6	38.5	20.2
S.I.	1,506	753	564	1,227	667	711	1,168	610	489	193	978	513

Units	N	P	Q	R	S	T	U	V	W	Y	Z
US Customary	40.4	14.75	36	29.5	22.9	45.8	3.5	6	12	1.44	1.12
S.I.	1,026	375	914	749	582	1,163	89	152	305	37	28

(All dimensions are for new OEM supplied units)

Standard Included Components

Load Cell and Linkage
Cooling Safety Package
Calibration Arm
Calibration Weight Hanger
Companion Flange / Hub Pattern 1810 - US Customary
Shaft End Guard
Magnetic Pickup and 60-tooth Gear
Pressurized Re-Circulating Oil System
Bearing RTDs

Everything you need to succeed

Dyne Systems is a division of Taylor Dynamometer
W209 N17391 Industrial Dr., Jackson, WI 53037
(800) 657-0726 **www.dynesystems.com**